Solutions for Perfection from Marin Industrietechnik

Heavy Weight Weaving Shuttles ARK

- *10-15 % Higher productivity utilization*
- *Cost reduction due to long life materials*
- *Cost saving due to modular construction*
- *No weaving marks on the fabric*

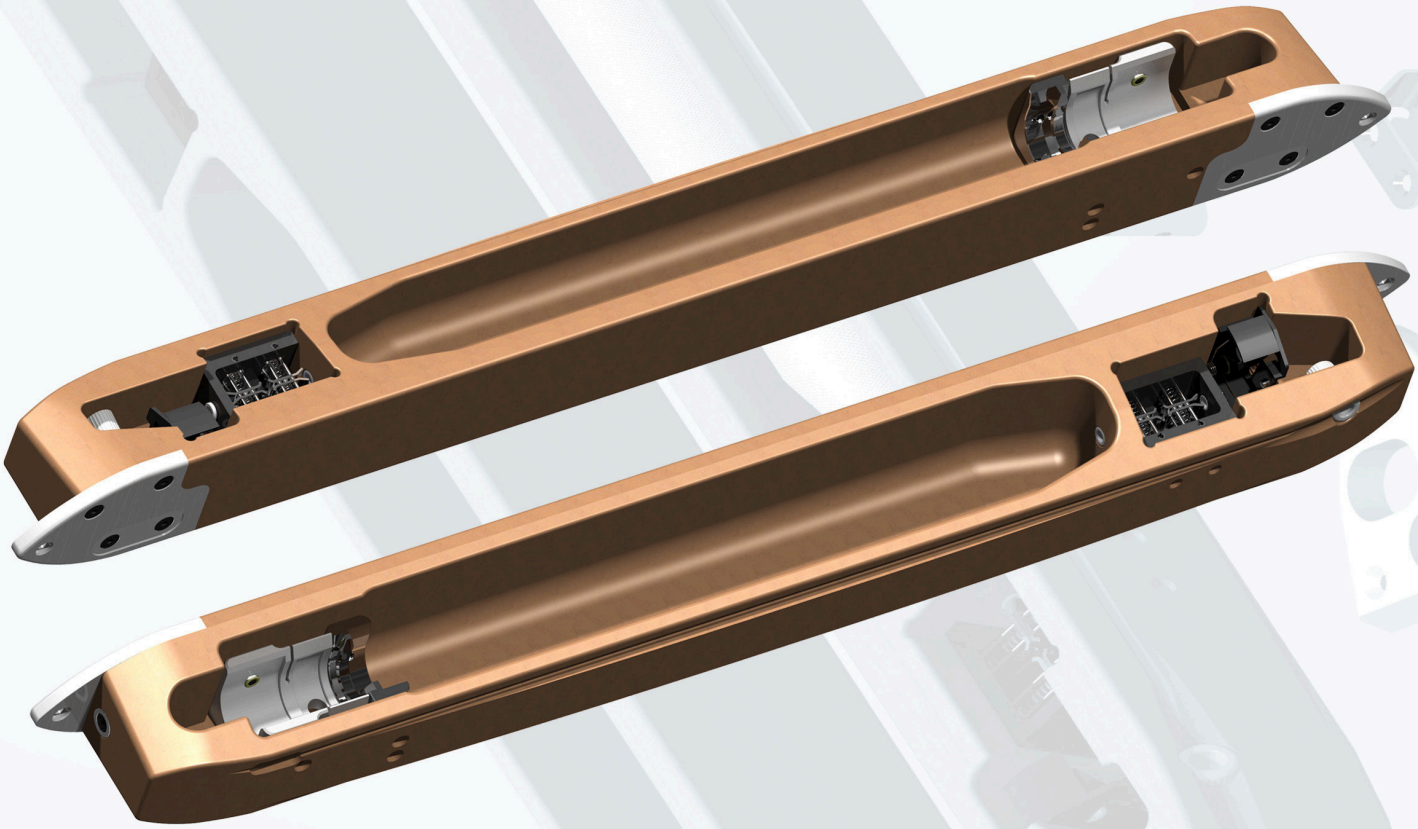

Regional Agent 區域代理:
A&A Consultant 香港A&A諮詢
: www.hkaac.net
@: info@hkaac.net ☎: +852-9023 4800
: PO Box 143,Tung Chung, HONG KONG (香港)

MARIN
Industrietechnik

Weaving Shuttles Type VRK-N1

High-Tec Shuttle type ARK, with polished sliding skids and full equipment. Application: Felt weaving looms with hydraulic insertion system and automatic pirn changer on the right loom side. For pirns with cylindrical end-shape with 4 steel rings.

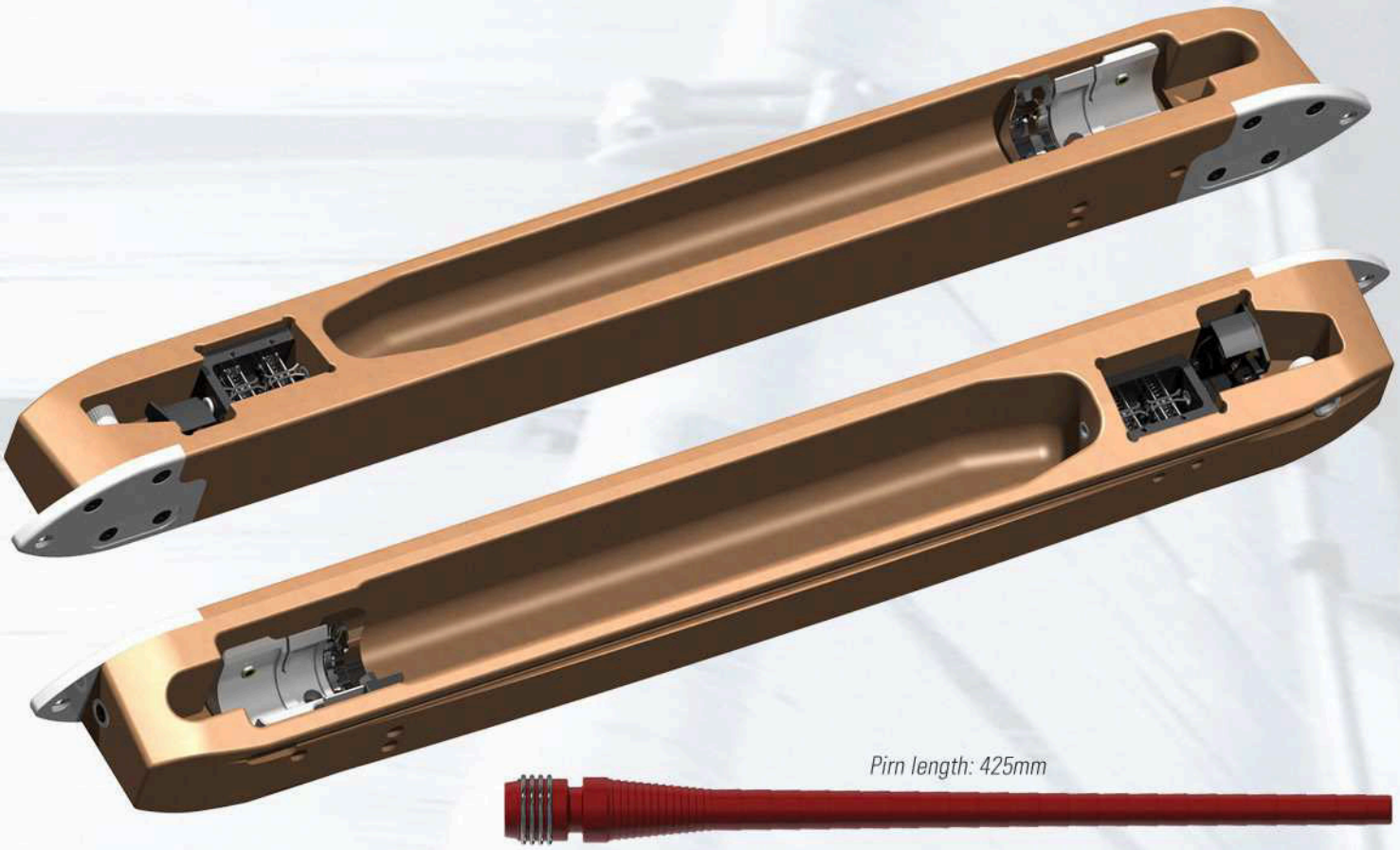

Full equipment:

2 Ceramic eyelets, 1 Shuttle nose type ARL, 1 Shuttle nose type ARR, 2 Sensor plates type A, 1 Clamping spring type TEX, 1 Pirn holder type TEX, 1 Yarn cutter type A, 1 Filling brake type BR, 1 Drill bush and all screwing connections.

Shuttle dimensions:

750/700x80x67/50 mm.

Clamping spring type TEX

Pirn holder type TEX

Weaving Shuttles Type ARG

High-Tec Shuttle type ARG on the highest precision level with basic equipment

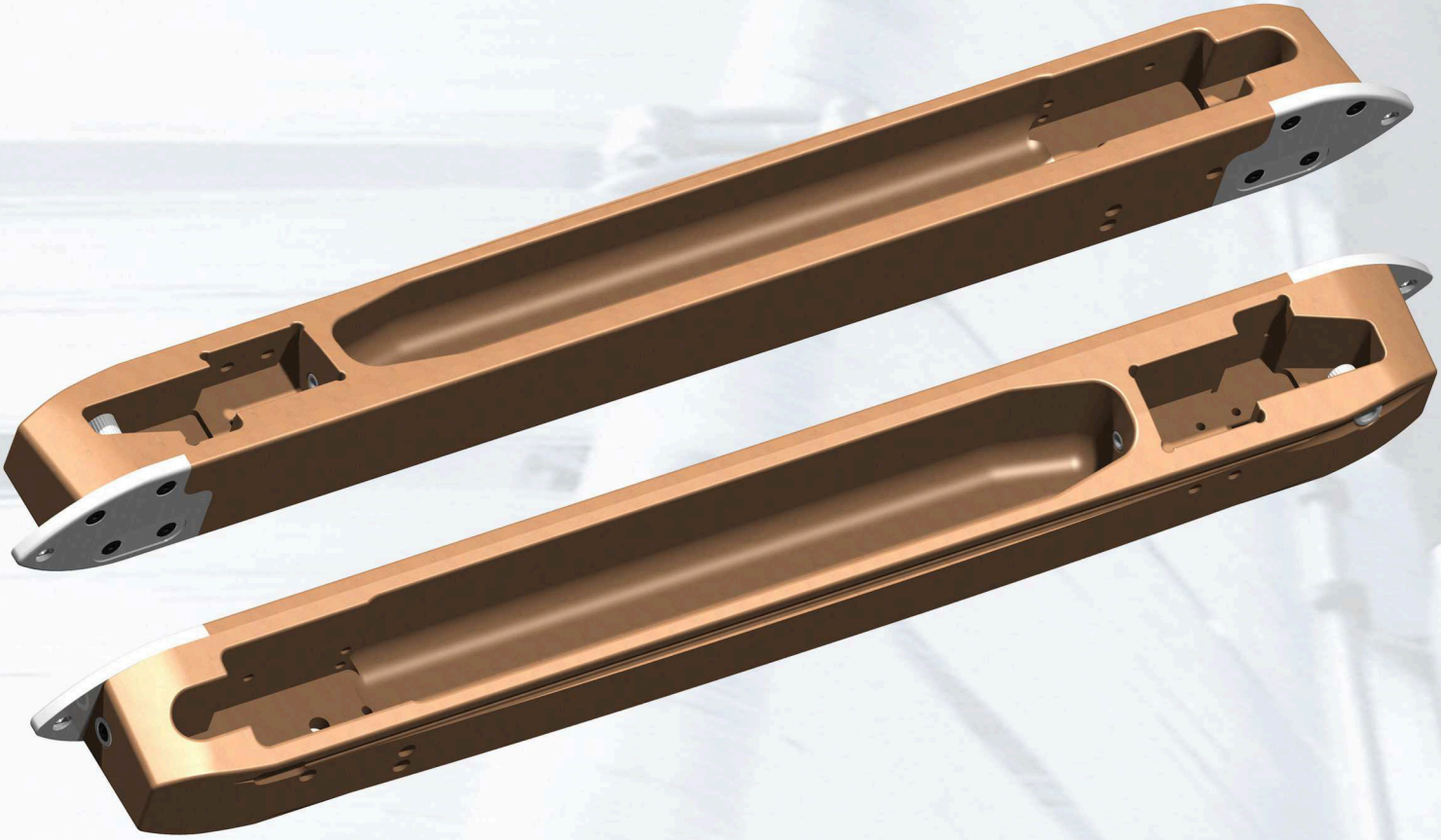

Basic equipment:

2 Ceramic eyelets, 1 Shuttle nose type ARL, 1 Shuttle nose type ARR, 2 Sensor plates type A, 2 locking nuts and 1 Drill bush at the left picking surface for pirn changer positioning

Shuttle dimensions:

750/700 x 80 x 67/50 mm

MARIN
Industrietechnik

Lechstrasse 2
73529 Schwaebisch Gmuend
Germany

fon: + 49 (0) 7171 98 90 52
fax: + 49 (0) 7171 98 90 53

email: info@marin-technik.de
home: www.marin-technik.de